S3i Limited | 1 Faraday Close | Snape Lane | Harworth | DN11 8RU
E info@s3i.co.uk | T +44 01302 752 504 | F +44 01302 752 410

Screw Eye - Wood Screw Thread - Stainless Steel

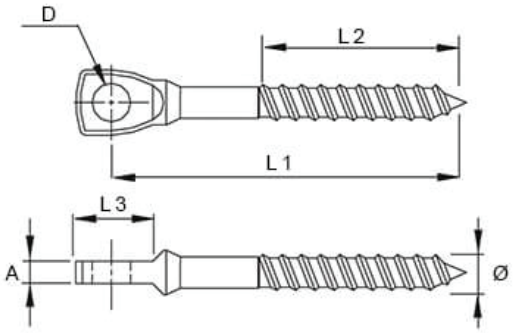

Code	Ø (mm)	L1 (mm)	L2 (mm)	L3 (mm)	A (mm)	D (mm)
SE-050	5	57	40	12	3	5.3
SE-060	6	60	40	13	3.8	6.3

A note about dimensional information
Please be aware that dimensions published on our site should be treated as indicative.
We publish dimensions to the best of our ability, however manufacturers can, from time to time, make small alterations to their designs.
If your dimensional criteria is critical please do contact us prior to making your purchase to let us know and we will do our best to fulfil your requirements.